Electrolux PROFESSIONAL

Drop-In Refrigerated quartz surface - 4GN with A overshelf

ITEM #

MODEL #

NAME #

SIS #

AIA #

341170 (D21C4O) Drop-in Refrigerated Quartz Surface (4 GN container capacity) with one A type overshelf and LED light

Short Form Specification

Item No.

Hydrocarbon refrigerant gas R290 for the lowest environmental impact (GWP=3) - CFC and HCFC free. Automatic defrosting guarantees evaporators clearance and efficient well cooling. High-density expanded polyurethane foam with cyclopenthane guarantees excellent well insulation to reduce energy dispersion. The bottom is equipped with copper tubes to ensure proper cooling, with this system the air touches the cold surface and gets cooled. Designed to serve the food on plates . Stylish A type overshelf designed for extra increased visibility on the surface for charming food display.

APPROVAL:

Main Features

- CB and CE certifed by a third party notified body.
- Precise temperature control and setting at 0,1°C .
- As standard the product comes with digitally controlled thermostat which is in line of HACCP norms and provides visual alarm as a warning of the increasing or decreasing temperatures.
- Food introduced at the correct temperature maintains its core temperature according to Afnor Standards.
- Automatic defrosting guarantees evaporators clearance and efficient well cooling.
- Designed to serve the food on plates .
- Equipped with a drain hole to easily discharge top condensation.
- It comes with stylish white coloured quartz top and stainless steel framed that makes it ideal to serve cold dishes in an elegant way.
- Stylish A type overshelf designed for extra increased visibility on the surface for charming food display.
- Overshelf equipped with LED lights.
- Designed to be positioned in flush installation providing improved cleanability and suitable for modern design installations.

Construction

- Electronic control with temperature display.
- IPx2 water protection.
- The bottom is equipped with copper tubes to ensure proper cooling, with this system the air touches the cold surface and gets cooled.
- AISI 304 Stainless steel frame with rounded corners to facilitate cleaning operations.
- Overshelf in complete AISI 304.

Sustainability

- Hydrocarbon refrigerant gas R290 for the lowest environmental impact (GWP=3) - CFC and HCFC free.
- High-density expanded polyurethane foam with cyclopenthane guarantees excellent well insulation to reduce energy

dispersion.

The company reserves the right to make modifications to the products
without prior notice. All information correct at time of printing.

Drop-In
Refrigerated quartz surface - 4GN with A overshelf

Front

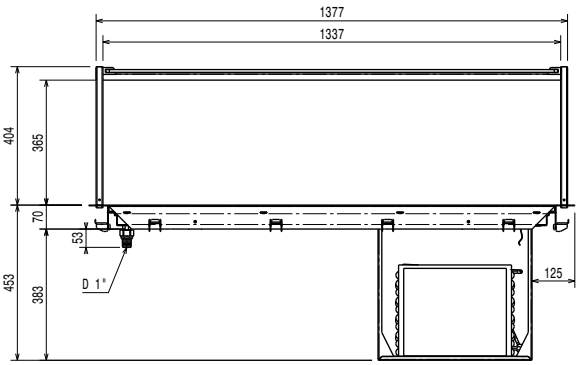

Side

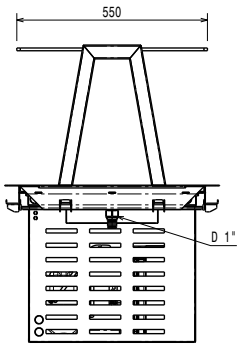

EI = Electrical inlet (power)

Top

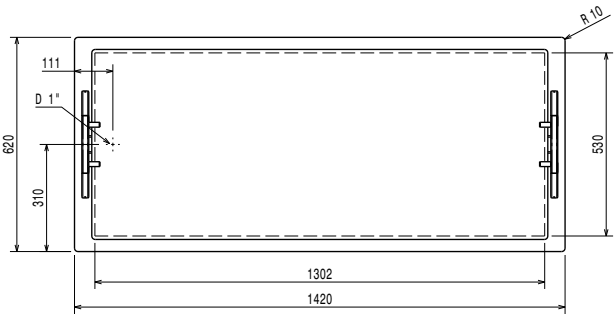

Electric

Supply voltage:	
341170 (D21C4O)	220-240 V/1N ph/50 Hz
Electrical power max.:	0.6 kW

Water:

Water drain outlet size:	
Drain line size:	

Key Information:

External dimensions, Width:	1420 mm
External dimensions, Depth:	620 mm
External dimensions, Height:	784 mm
Net weight:	72.3 kg
Shipping weight:	120 kg
Shipping height:	1120 mm
Shipping width:	660 mm
Shipping depth:	1440 mm
Shipping volume:	1.06 m³
Set temperature:	-10 / 0 °C
Top temperature:	-10 / 0 °C

Refrigeration Data

Refrigerant type:	R290

Sustainability

Noise level:	58,23 dBA

The company reserves the right to make modifications to the products without prior notice. All information correct at time of printing.

2024.10.08

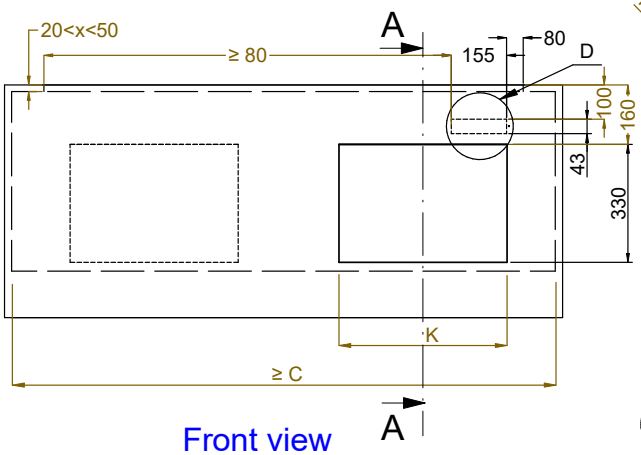

Front view
Scala: 1:10

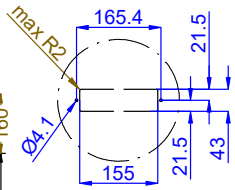

Dettaglio D
Scala 1:7

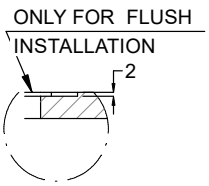

Dettaglio B
Scala 1:2

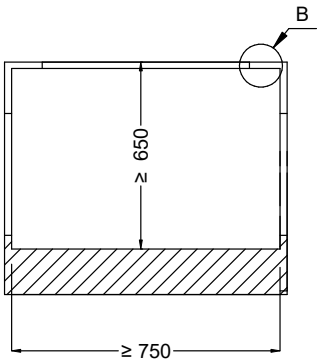

Section Cut A-A
Scala: 1:10

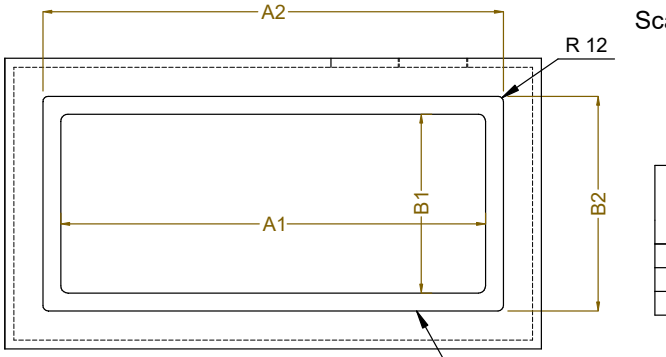

Top view
Scala: 1:20

CAPACITY	CUTOUT		LOWERING FOR FLUSH INSTALLATION		C	K
	A1	B1	A2	B2		
2GN	740	560	774	624	855	470
3GN	1070		1104		1190	
4GN	1390		1424		1510	

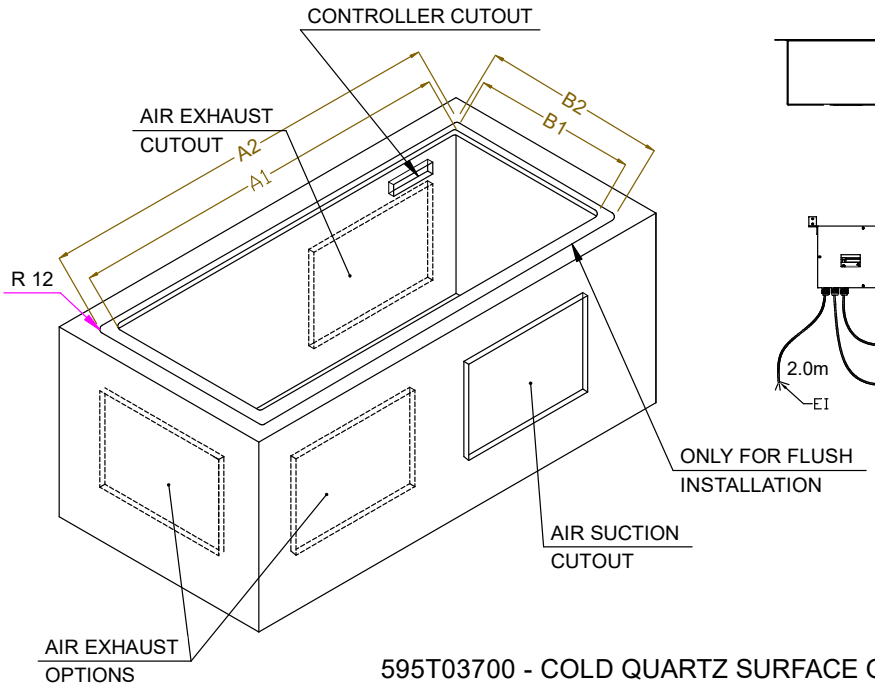

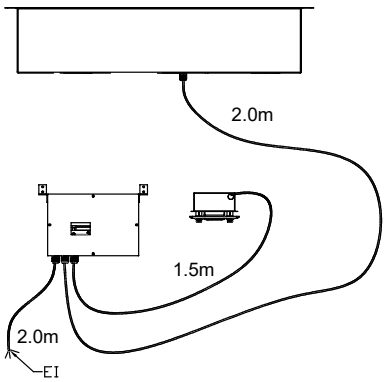

595T03700 - COLD QUARTZ SURFACE OVERSH. ON THE FRAME

The company reserves the right to make modifications to the products without prior notice. All information correct at time of printing.